Li-ion

LEADPOWER

5KWH Series

WALL MOUNTED ENERGY STORAGE BATTERY

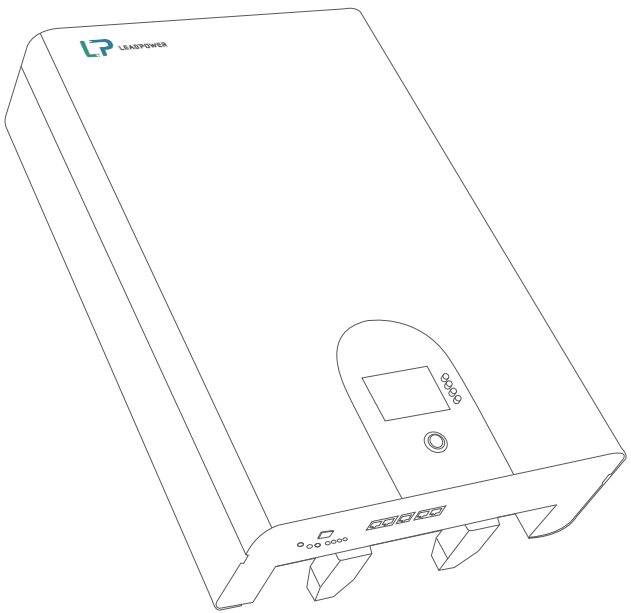

Rechargeable LiFePO4 Battery
User Manual

(1)

This manual introduces the 2.4Kwh~10Kwh Series, please read this manual before installing the battery, and follow the instructions carefully during the installation process. If you have any questions, please contact manufacturer for assistance immediately.

1. Safety Instructions ---------- 3
1.1 Before Connecting ---------- 4
1.2 In Using ---------- 4
2. Introduction ---------- 5
2.1 Product Features ---------- 5
2.2 Product Specification ---------- 6
2.3 Equipment Interface Instruction ---------- 8
2.4 BMS Basic Function ---------- 12
3. Safe Handling Guide of Lithium Battery ---------- 13
3.1 Schematic Diagram of Solution ---------- 13
3.2 Consider the Following Points before Selecting Where to Install ---------- 13
4. Installation and Operation ---------- 13
4.1 Package Items ---------- 13
4.2 Single Battery Connection ---------- 14
4.3 Parallel Connection of Multiple Batteries ---------- 14
4.4 Connected to Inverter ---------- 15
5. Switch ON / OFF ---------- 16
6. Trouble Shooting ---------- 16
7. Emergency Situations ---------- 18
8. Remarks ---------- 18

1. Safety Instructions

Reminding

(1) Before installing or using the battery, it is important and necessary to read the user manual (in the attachment)carefully. Failure to do so or to follow any instructions or warnings in this document may result in electric shock, serious injury or death, or may damage the battery, potentially rendering it inoperable.
(2) If the battery is stored for long time, it is required to charge them every six months, and the SOC should be no less than 90%.
(3) The battery needs to be recharged within 12 hours after fully discharged.
(4) Do not install the product in an outdoor environment, or an environment beyond the operating temperature or humidity range listed in the manual.
(5) Do not expose the cable to the outside.
(6) Do not connect power terminal reversely.
(7) All battery terminals must be disconnected for maintenance.
(8) Please contact the supplier within 24 hours if there is something abnormal.
(9) Do not use detergent to clean the battery.
(10) Do not expose batteries to flammable or harsh chemicals or vapors.
(11) Do not paint any part of the battery, including any internal or external components.
(12) Do not connect battery with PV solar wiring directly.
(13) The warranty claims are excluded for direct or indirect damage due to items above.
(14) Any foreign object is prohibited to insert into any part of battery.

Warning

1.1 Before connecting

1) After unpacking, please check the product and packing list first, if the product is damaged or missing parts, please contact your local dealer.
2) Before installation, be sure to cut off the grid power and make sure the battery is in the turned-off mode.
3) Wiring must be correct, do not mistake the positive and negative cables, and ensure no short circuit with the external device.
4) It is forbidden to directly connect the battery with AC power.
5) The battery embedded BMS is designed for 51.2VDC, please do not connect the battery in series.
6) The battery must be grounded and the resistance must be less than 0.10.
7) Please ensure that the electrical parameters of the battery system are compatible with related equipment.
8) Keep the battery away from water and fire.

1.2 In using

1) If you need to move or repair the battery system, you must cut off the power supply and turn off the battery completely.
2) It is forbidden to connect the battery with different types of batteries.
3) It is forbidden to connect the battery with a faulty or incompatible inverter.
4) It is forbidden to disassemble the battery (the QC sheet falls off or is damaged).
5) In the event of a fire, only dry powder fire extinguishers can be used, and liquid fire extinguishers are prohibited.
6) Please do not open, repair or disassemble the battery except staffs from manufacturer or authorized by manufacturer. We do not undertake any consequences or related responsibility which because of violation of safety operation or violating of design, production and equipment safety standards.

2. Introduction

2.4Kwh~10Kwh Series lithium iron phosphate battery is a new energy storage product developed and produced by Senior team, which can provide reliable power support for various equipment and systems.
The 2.4Kwh~10Kwh Series has a built-in BMS battery management system, which can manage and monitor battery voltage, current, temperature and other information.

2.1 Product Features

(1) Built-in soft start function, when the inverter needs to start from the battery, it can reduce the current impact.
(2) Double active protection at BMS level.
(3) Automatically set the address when multiple groups are connected.
(4) Support wake-up via 5~12V signal of RJ45 port.
(5) Support the host controller to upgrade the battery module through CAN or RS485 communication.
(6) Enable 95% depth of discharge, which can be used for inverters operating in full compliance with the CAN protocol.
(7) The module is non-toxic, non-polluting and environmentally friendly.
(8) The cathode material is lithium iron phosphate, which has good safety performance and long cycle life.
(9) The battery management system (BMS) has protection functions such as over-discharge, over-charge, over-current, high and low temperature, etc.
(10) The system can automatically manage the charging and discharging status and balance the voltage of each cell.
(11) Flexible configuration, multiple battery modules can be connected in parallel to expand capacity and power.
(12) Adopt self-cooling method to quickly reduce the overall noise of the system.
(13) The module has less self-discharge, and can be put on the shelf for up to 6 months without charging. There is no memory effect, and the shallow charge and discharge performance is excellent.
(14) Small size, light weight, standard of 19-inch embedded design module. Easy to install and maintain.

2.2 Product Specification

(1) Product appearance and size

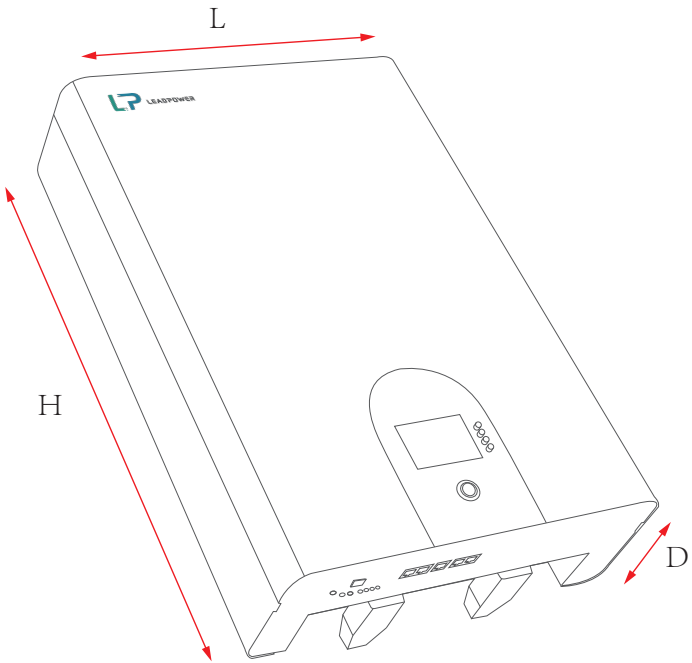

Model	LP-PW-512100		
Specification	L（MM）	D（MM）	H（MM）
Battery Size	413	153	602

※ The above dimension "D" direction does not include the support dimensionand the support space is 35mm.

(2) Battery Technical Specification

Parameters	Data Sheet
Model	LP-PW-512100
Energy(Wh)	5.12Kwh
Nominal Voltage	51.2V
Nominal Capacity	100Ah
Net Weight	48.8Kg
Discharge Voltage	43.2V
Charging Voltage	58.4V
Recommended Charging Current	50A
Max Charging Current	80A
Recommended Discharging Current	50A
Max Discharging Current	100A
Max Loaded Power	≤5Kw(48V DC)
Peak charging / Discharging current	150A
Communication	RS232/RS485/CAN(Optional Bluetooth / Wifi)
Depth of Discharge	95%
Nos of Cells	16 pcs
Working Temperature	0°C~50°C Charge/-10°C~50°C Discharge
The Shelf Temperature	-20°C~60°C
Humidity	5~95%(RH)
Certificates	CE/UN38.3/MSDS
Design Life Cycle	10+Years（25℃/77°F）
Cycles	≥6000 at 25℃

2.3 Equipment interface instruction

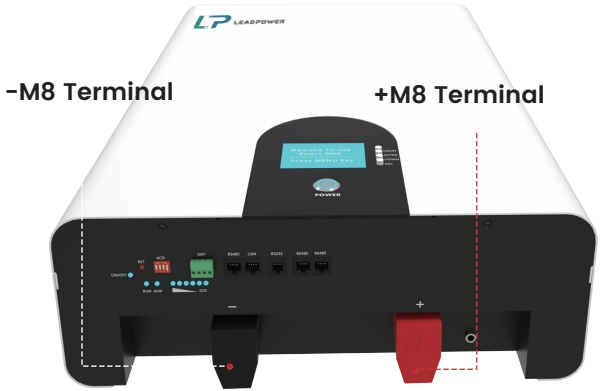

❶ **Function Switch**

a). ON: Starting b). OFF: Power off for storage or transportation

❷ **Battery Information Display**

Button(Battery information view)

a). MENU b). ENTER c). DOWN d). ESC

❸ **Battery Switch Indicator**

❹ **RUN**

Green LED light shows battery running status

❺ **ALM**

Red LED flashing indicates battery alarm;

(On: The battery is protected.)

❻ **Battery Indicator**

Six green LED show the current capacity of the battery

LED Working Status Indication

Status	Normal/ Alarm	ON/OFF	RUN	ALM	Battery Indicator LED					
		●	●	●	●	●	●	●	●	●
Shut Down	Dormant	-	-	-	-	-	-	-	-	-
Standby	Normal	●	◐	-	Show SOC					
	Alarm	●	◐	▮						
Charge	Norma	●	●	-	Show SOC The max. power indicator LED ◐					
	Alarm	●	●	▮						
Discharge	Normal	●	▮	-	Show SOC					
	Alarm	●	▮	▮						

* **Caution:** Other status exception, please consult your seller.

Description of Battery Capacity Indicator

Status		Charge						Discharge					
Capacity Indicator		L6	L5	L4	L3	L2	L1	L6	L5	L4	L3	L2	L1
		●	●	●	●	●	●	●	●	●	●	●	●
Capacity (%)	0-16.6%	-	-	-	-	-	▮	-	-	-	-	-	●
	16.6-33.2%	-	-	-	-	▮	●	-	-	-	-	●	●
	33.2-49.8%	-	-	-	▮	●	●	-	-	-	●	●	●
	49.8~66.4%	-	-	▮	●	●	●	-	-	●	●	●	●
	66.4-83.0%	-	▮	●	●	●	●	-	●	●	●	●	●
	83.0-100%	▮	●	●	●	●	●	●	●	●	●	●	●
RUN Indicator		●						▮					

LED Flashing Description

Flashing Mode	Bright	Extinguish
	Long Bright	Long Extinguish
	0.25S	3.75S
	0.5S	0.5S
	0.5S	1.5S

7 Reset

a). Long press for more than 0.5s to start the battery.
b). Long press for more than 5 seconds to turn off the battery.
DIP Switch: DIP switch setting instructions.

8 DIP Switch Diagram

(SW1 Connector)

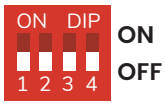

Flashing Mode	Bright		Extinguish	
0	OFF	OFF	OFF	OFF
1	ON	OFF	OFF	OFF
2	OFF	ON	OFF	OFF
3	ON	ON	OFF	OFF
4	OFF	OFF	ON	OFF
5	ON	OFF	ON	OFF
6	OFF	ON	ON	OFF
7	ON	ON	ON	OFF
8	OFF	OFF	OFF	ON
9	ON	OFF	OFF	ON
10	OFF	ON	OFF	ON
11	ON	ON	OFF	ON
12	OFF	OFF	ON	ON
13	ON	OFF	ON	ON
14	OFF	ON	ON	ON
15	ON	ON	ON	ON

a). Single Battery Set Using Dial Code:

b). Multiple sets of batteries in parallel use the DIP settings:

Multiple sets of batteries in parallel use the DIP.

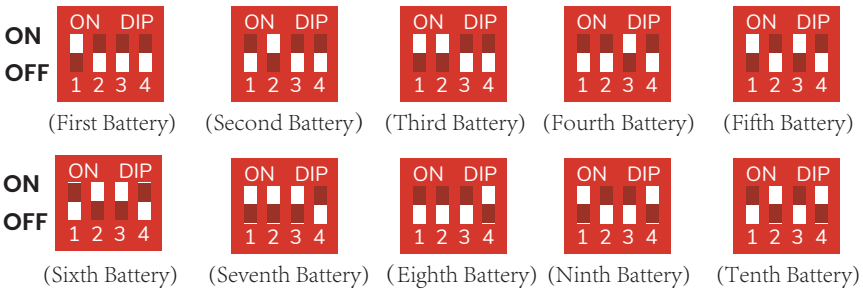

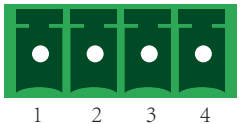

⑨ Dry Contact: Output Description

a). Dry contact 1-PIN1 to PIN2: normally open, Low battery close.

b). Dry contact 2-PIN3 to PIN4: normally open, Closed during fault protection.

⑩ RS485 and CAN

For Connecting with inverter and slave battery

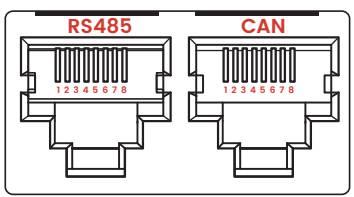

RS485-8P8C Vertical RJ45 Socket is Adopted		CAN--8P8C Vertical RJ45 Socket is Adopted	
RJ45-A PIN	Definition Description	RJ45-B PIN	Definition Description
1、8	RS485-B1	1、2、3、6、8	NC(Empty)
2、7	RS485-A1	4	CANL
3、6	GND	5	CANH
4、5	NC(Empty)	7	GND

RS485 and CAN Communication Port Definition

⑪ RS232 (Adjusting):

RS232 connecting with upper computer to let manufacturer or professional engineer to process adjusting service.

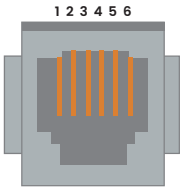

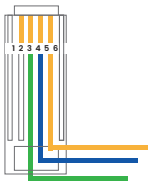

RS232 Communication Port Definition

RS232--6P6C Verlical RJ11 Socket is Adopted	
RJ11 PIN	Definition Description
1、2、6	NC(Empty)
3	TX BMS Sending Data(PC Receiving Data)
4	RX BMS Receiving Data(PC Sending Data)
5	GND

⑫ Parallel Communication Port

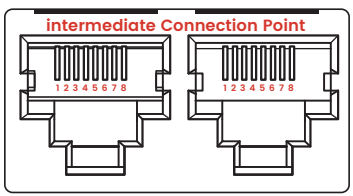

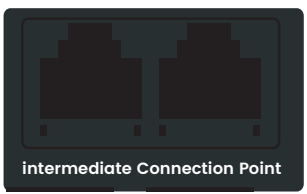

RS485 Battery Pack Parallel Function

a). Under parallel status, communication address 0001 is master battery, rest communications are for slave battery's. And slave battery pack could be communicated with master battery pack through RS458 port. Master battery pack will collect all slave battery's data.

b). When parallel status, only master battery pack communicate with PC upper computer as remote monitoring, uploading datas, displaying status & any other info of all battery packs.

RS485 Parallel Communication--8P8C Vertical Double RJ45 Socket is Adopted			
RJ45-A PIN	Definition Description	RJ45-B PIN	Definition Description
1、8	RS485-B	1、8	RS485-8
2、7	RS485-A	2、7	RS485-A
3、6	GND	3、6	GND
4、5	NC(Empty)	4、5	NC(Empty)

RS485 Parallel Communication Port Definition

c).Diagram RS485 Parallel Cables Connection

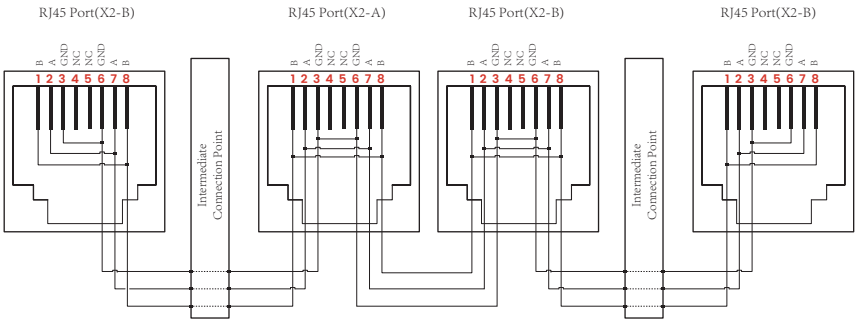

Processing several pack parallel communication, need to set the single pack DIP firstly, And the BCD format of point 8 is adopted.

2.4 BMS Basic Function

Protection And Alarm	Management And Monitor
Charge / Discharge End	Cells Balance
Charge Over Voltage	Intelligent Charge Model
Discharge Under Voltage	Charge / Discharge Current Limit
Charge / Discharge Over Current	Capacity Retention Calculate
High / Low Temperature(cell/BMS)	Administrator Monitor
Short Circuit	Operation Record
	Power Cable Reverse
	Soft Start of Inverter

3. Safe Handling Guide of Lithium Battery

3.1 Schematic Diagram of Solution

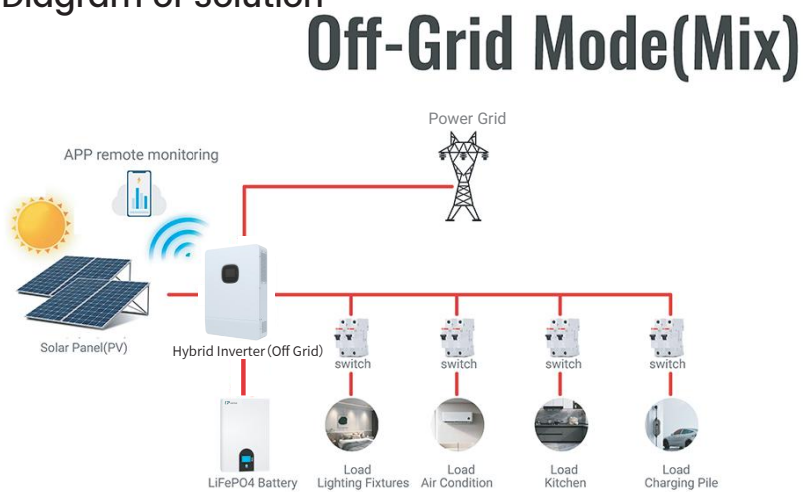

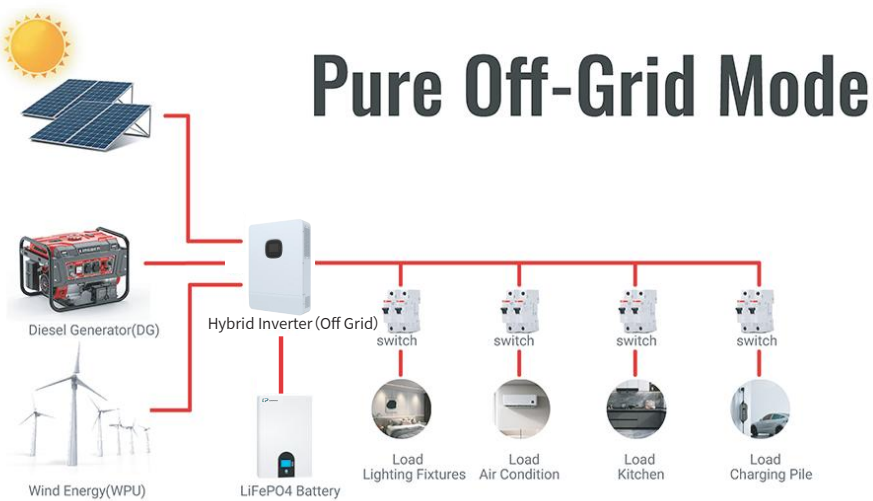

On Grid Mode

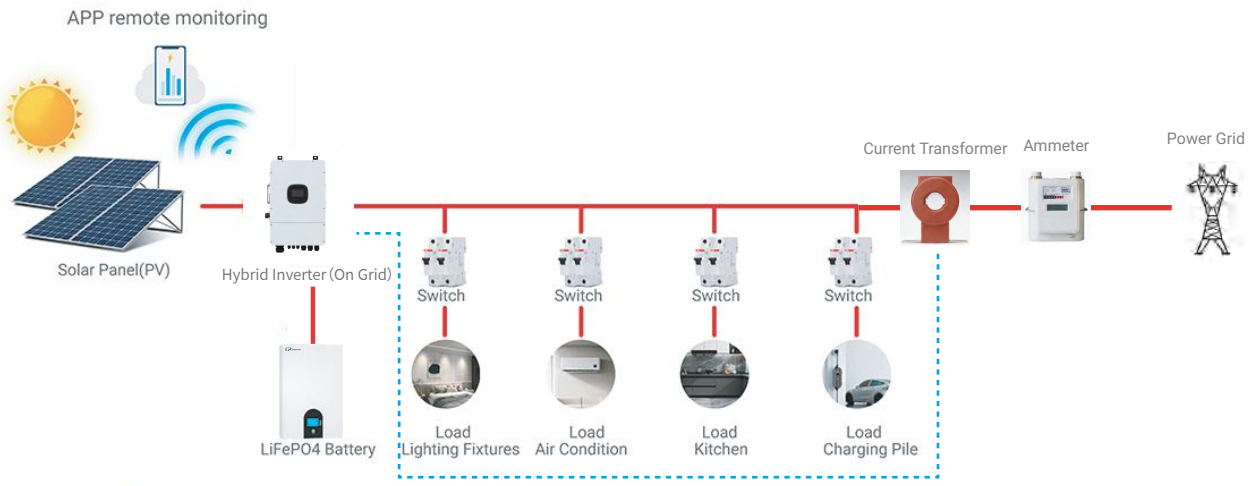
APP remote monitoring
Solar Panel(PV)
Hybrid Inverter (On Grid)
LiFePO4 Battery
Current Transformer
Ammeter
Power Grid
Switch
Switch
Switch
Switch
Load
Lighting Fixtures
Load
Air Condition
Load
Kitchen
Load
Charging Pile
Communication connection

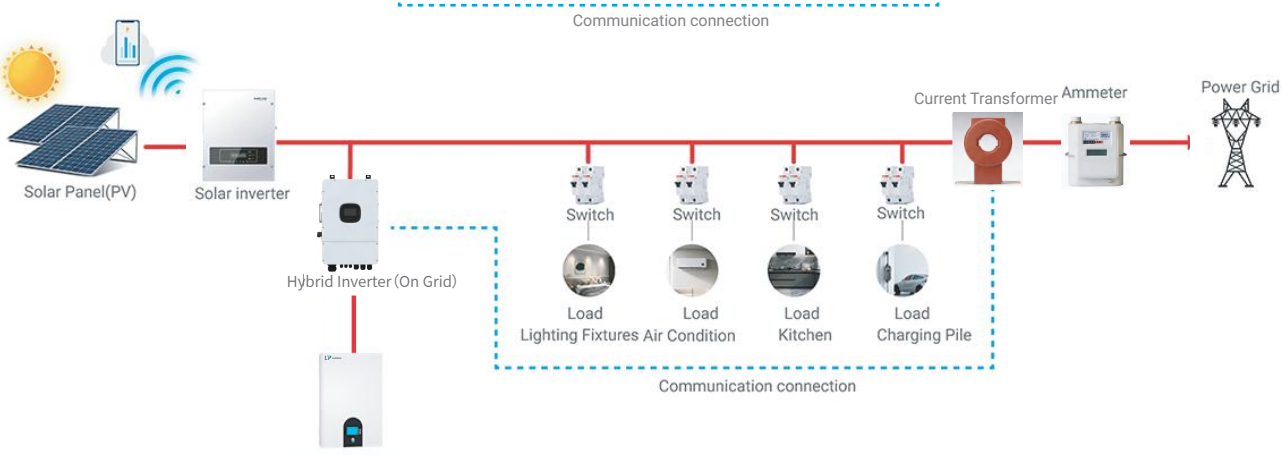
Solar Panel(PV)
Solar inverter
Hybrid Inverter (On Grid)
LiFePO4 Battery
Current Transformer
Ammeter
Power Grid
Switch
Switch
Switch
Switch
Load
Lighting Fixtures
Load
Air Condition
Load
Kitchen
Load
Charging Pile
Communication connection

3.2 Consider the following points before selecting where to install:

a). Do not mount the battery on flammable construction materials.
b). The ambient temperature should be between 0°C and 45°C to ensure optimal operation.
c). The recommended installation position is to be adhered to the wall vertically.
d). Be sure to keep other objects and surfaces as shown in the right diagram to guarantee sufficient heat dissipation and to have enough space for removing wires.

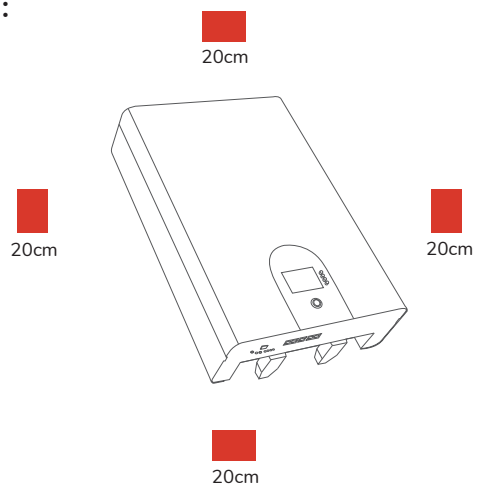

4. Installation and Operation

1. Package Items (Unpack and check the packing list) : Battery pack* 1
2. 2*M8 Screw and Shield Cover ; Two Cables (1 * BLACK : 1* RED)
1*RS485 Communication Line

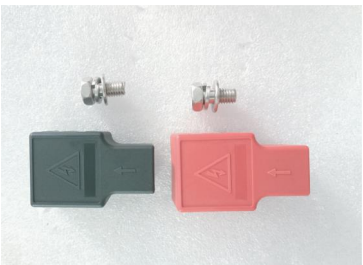

2*M8 Screw
(Installed on terminal)

For parallel connection of battery
(BLACK“_"/RED“+")

Communication Connection Line
RJ45 for RS485/CAN

3. Could be customized per required: battery cable,communication cable, parallel cable, grounding cable.
4. 1*Wall-hanging bracket and 4* Installable screws
How to install the battery on the wall?
Step 1: Find a firm and vertical wall.
Step 2: Fix the wall hanging bracket on the wall with mounting screws
Step 3: Lift the battery and hang it on the wall bracket.

4.2 Single Battery Connection.

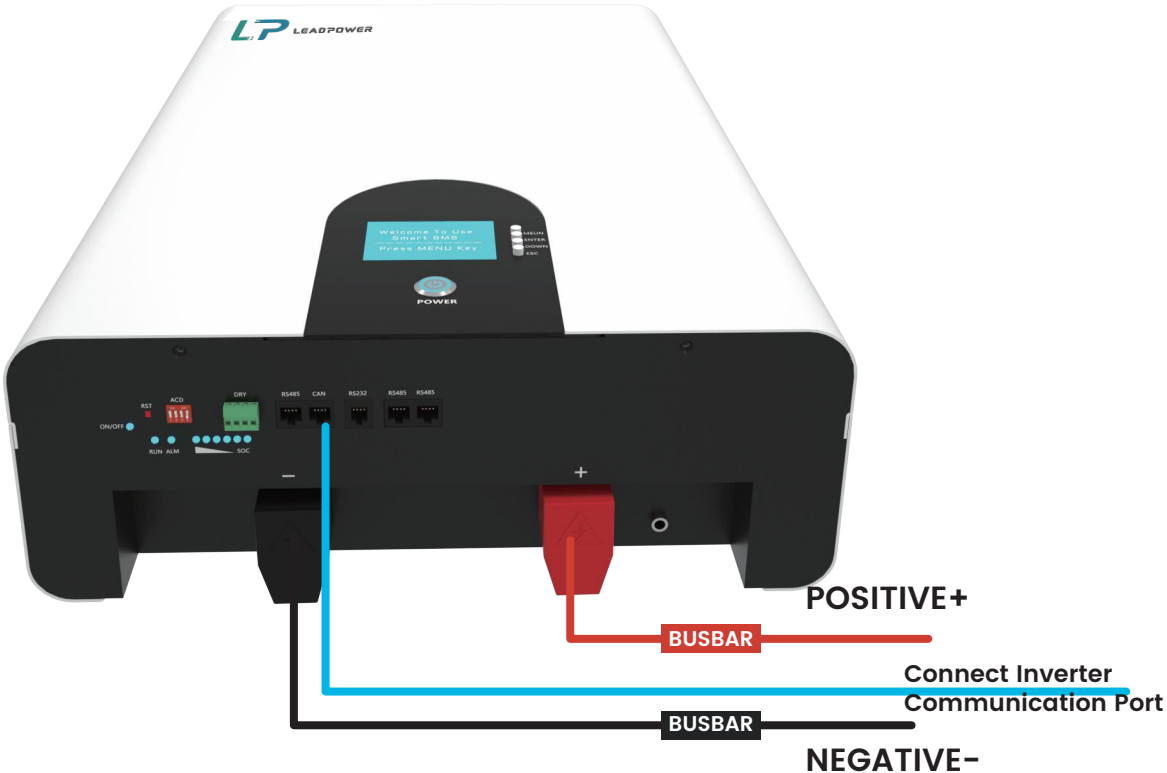

5Kwh(LP-PW512100*1) Battery

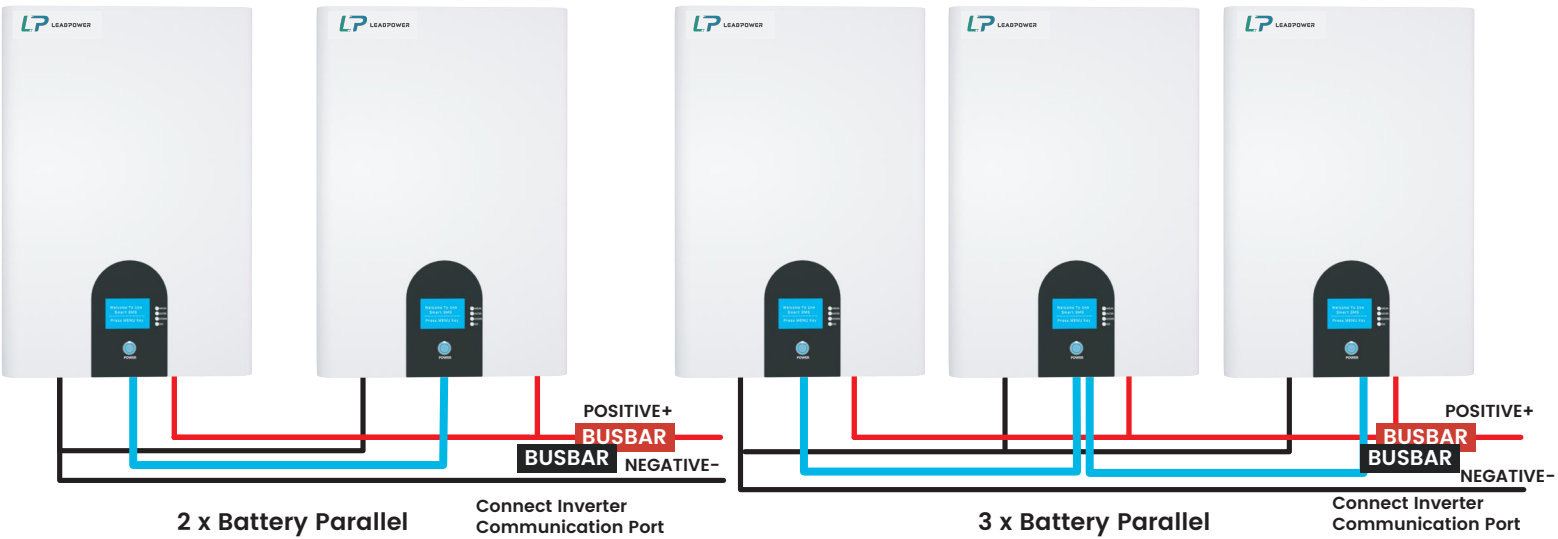

The positive and negative bus bars are non-standard accessories, and the length and load current are customized according to the demand.

Before the parallel connection of the battery pack, please fully charge the single battery or ensure the voltage between the batteries is consistent to achieve the optimal performance of the battery.

Connect the positive and negative cables of the battery to the positive and negative ports of the DC input of the inverter, and connect the communication line to the BMS/RS485 port on the inverter to complete the connection between the battery and the inverter.

5. Switch ON /OFF

a). Switch on: Press On/Off button to switch on the battery, then the battery will do self-inspection before enable output. The LED will show the SOC.

b). Switch off: Press and hold On/Off button for 3 seconds, the battery will shut down directly.

Please refer to "2.3" of this manual for the description of communication port and LED indication.

6. Trouble Shooting

Problem determination based on:

(1) Whether the battery can be turned on or not.

(2) If battery is turned on, check the red light is off, flashing or lighting.

(3) If the red light is off, check whether the battery can be charged / discharged or not.

Possible conditions:

(1) Battery cannot turn on, switch ON and press the metal SW the lights are all no lighting or flashing.

(1.1) Capacity too low, or module over discharged.
Solution: Use a charge or inverter to provide 57.6-58.4V voltage.
a. If battery can start, then keep charge the module and use monitor tools to check the battery log.
b. If battery terminal voltage is <43.2Vdc, please use 0.05C to slowly charge the module to avoid affect to SOH.
c. If battery terminal voltage is >43.2Vdc, it can use 0.5C to charge.
d. If battery cannot start, turn off battery and repair.
(2) The battery can turn on, but red light is lighting, and cannot charge or discharge. If the red light is lighting, that means system is abnormal, please check values as following.
(2.1) Temperature: Above 60°C or under -10°C, the battery could not work.
Solution: to Move battery to the normal operating temperature range between 0°C and 50°C.
(2.2) Current: If current exceeds 105A, battery protection will turn on.
Solution: Check whether current is too large or not, if it is, change the settings on power supply .
(2.3) High Voltage: If charging voltage above 59.2V, battery protection will turn on.
Solution: Check whether voltage is too high or not, if it is, to change the settings on power supply side.
And discharge the module.
(2.4) Low Voltage: When the battery discharges to 43.2V or less, battery protection will turn on.
Solution: Charge the battery till the red light turns off.
(2.5) Cell voltage high: The module voltage is lower than 44V, SOC LED does not all on. When discharge the module protection disappear.
Solution: Keep charge the module by 57.6-58.4V or keep the system cycle. The BMS can balance the cell during cycling.
(3) Unable to charge and discharge with red LED on. The temperature is 0-50°C. Use charger to charge, not possible. Use load to discharge, not possible.
(3.1) Under permanent protection. The single cell voltage has been higher than 3.8 or lower than 2.0 or temperature higher than 80°C.
Solution: Switch off the module and contact your local distributor for repair.
(3.2) Fuse broken.
Solution: Switch off the module and contact your local distributor for repair.

(4) Buzzer rings.
(4.1) Reverse connection of cables.
Solution: Power off all batteries and inverters. Disconnect breaker. Check the cable connection and disconnect all power cables. Check the power port damaged or not, then try turn on the single module, without any cable connected. If no alarm, then it is reverse connection of cables. Switch off the module and contact your local distributor.
(4.2) MOSFAIL
Solution: Power off all batteries and inverters. Disconnect breaker. Check the cable connection and disconnect all power cables. Check the power port damaged or not. Then try turn on the single module, without any cable connected. If still buzzer rings, then it is mos fail. Switch off the module and contact your local distributor.
(5) After switch on, the module turns on directly.
(5.1) BMS failure.
Solution: Switch off the module and contact your local distributor.
Excluding the above points, if the fault still cannot be located please turn off the battery and repair it.

7. Emergency Situations

(1) Leaking Batteries
If the battery pack leaks electrolyte, avoid to contact with the leaking liquid orgas. If one is exposed to the leaked substance, immediately perform the actions described below:
(1.1) Inhalation: Evacuate the contaminated area and seek medical attention.
(1.2) Contact with eyes: Rinse eyes with flowing water for 15 minutes and seek medical attention.
(1.3) Contact with skin: Wash the affected area thoroughly with soap and water and seek medical attention.
(1.4) Ingestion: Induce vomiting and seek medical attention.
(2) Fire
NO WATER! Only dry powder fire or carbon dioxide extinguisher can be used. If possible, move the battery pack to a safe area before it catches fire.

(3) Wet Batteries

If the battery pack is wet or submerged in water, do not let people access it, and then contact dealer for technical support. Cut off all power switch on inverter side.

(4) Damaged Batteries

Damaged batteries are dangerous and must be handled with the utmost care. They are not fit for use and may pose a danger to people or property. If the battery pack seems to be damaged, pack it in its original container, and then return it to dealer.

8. Remarks

Recycle and Disposal

In case a battery (normal condition or damaged) needs disposal or needs recycling, it shall follow the local recycling regulation (i.e. Regulation (EC) N1013/2006 among European Union) to process, and using the best available techniques to achieve a relevant recycling efficiency.

Maintenance

(1) It is required to charge the battery at least once every 6 months, for this charge maintenance make sure the SOC is charged to higher than 90%.

(2) Every year after installation. The connection of power connector, grounding point. Power cable and screw are suggested to be checked.Make sure there is no loose, no broken and no corrosion at connection point.

Check the installation environment such as dust, water, insect, etc.

(3) If the battery is stored for long time, it is required to charge them every six months and the SOC should be higher than 90%.